1 : 10

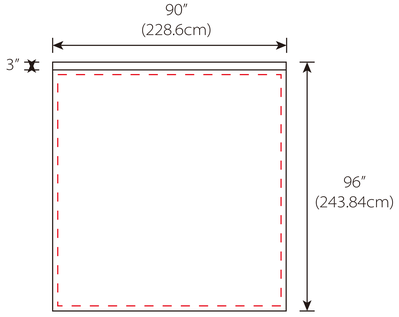
90″
(228.6cm)
3″
96″
(243.84cm)

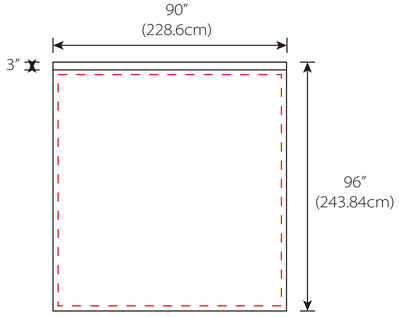
90″
(228.6cm)
3″
96″
(243.84cm)

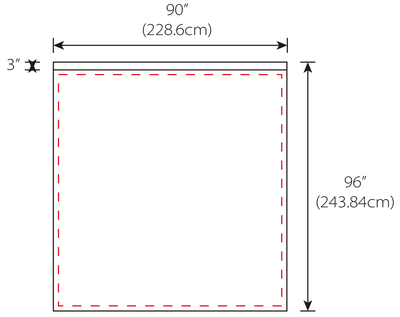
90″
(228.6cm)
3″
96″
(243.84cm)

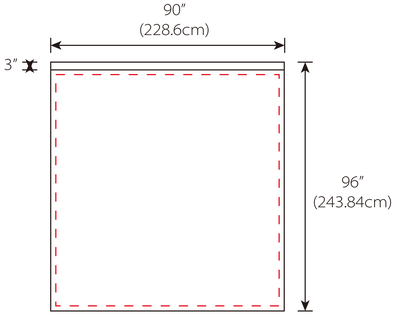
90″
(228.6cm)
3″
96″
(243.84cm)

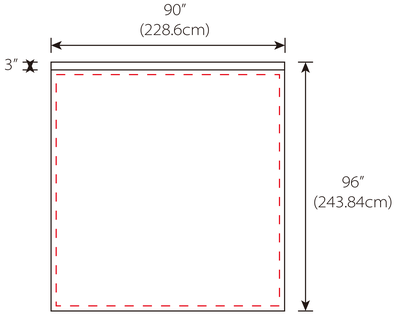
90″
(228.6cm)
3″
96″
(243.84cm)